EXPLODED DRAWING—Model No. GZFW20311

R0204A

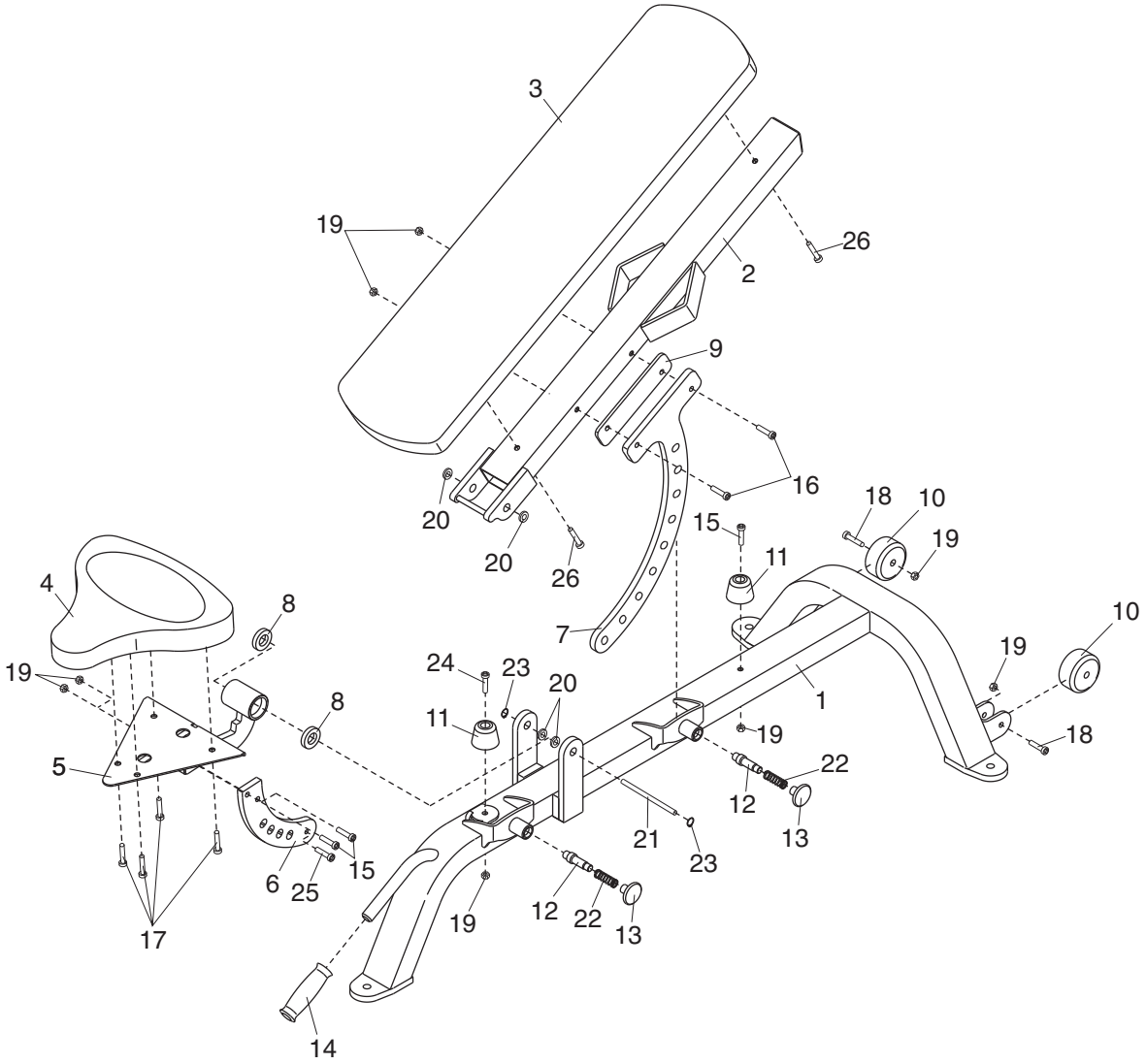

Bubble #	OEM Number	Description
3	GZ5108-10	BACKREST
4	GZ5108-25	SEAT
10	GZ1112	WHEEL
11	GZ1111	BUMPER
12	GZ3352	ADJUSTMENT PIN
13	GZ3350	ADJUSTMENT KNOB
14	GZ1032-01	RUBBER GRIP
15	GZ1014-02	3/8" X 3" BOLT
17	GZ1014-01	3/8" X 1" BOLT
18	GZ1014-02	3/8" X 3" SCREW
19	GZ1007	3/8" NYLON LOCKNUT
22	285751	SPRING
23	GZ1018-05	5/8" RETAINER RING
24	GZ1014-03	3/8" X 4" BOLT
25	GZ1013-15	3/8" X 1/2" BOLT